DIMENSIONS:	
A	3.750" ±0.063
B	3.935" ±0.125
C	4.560" ±0.063
D	3.000" ±0.063
E	2.813" ±0.063
G	0.203" x 0.375" ±0.015

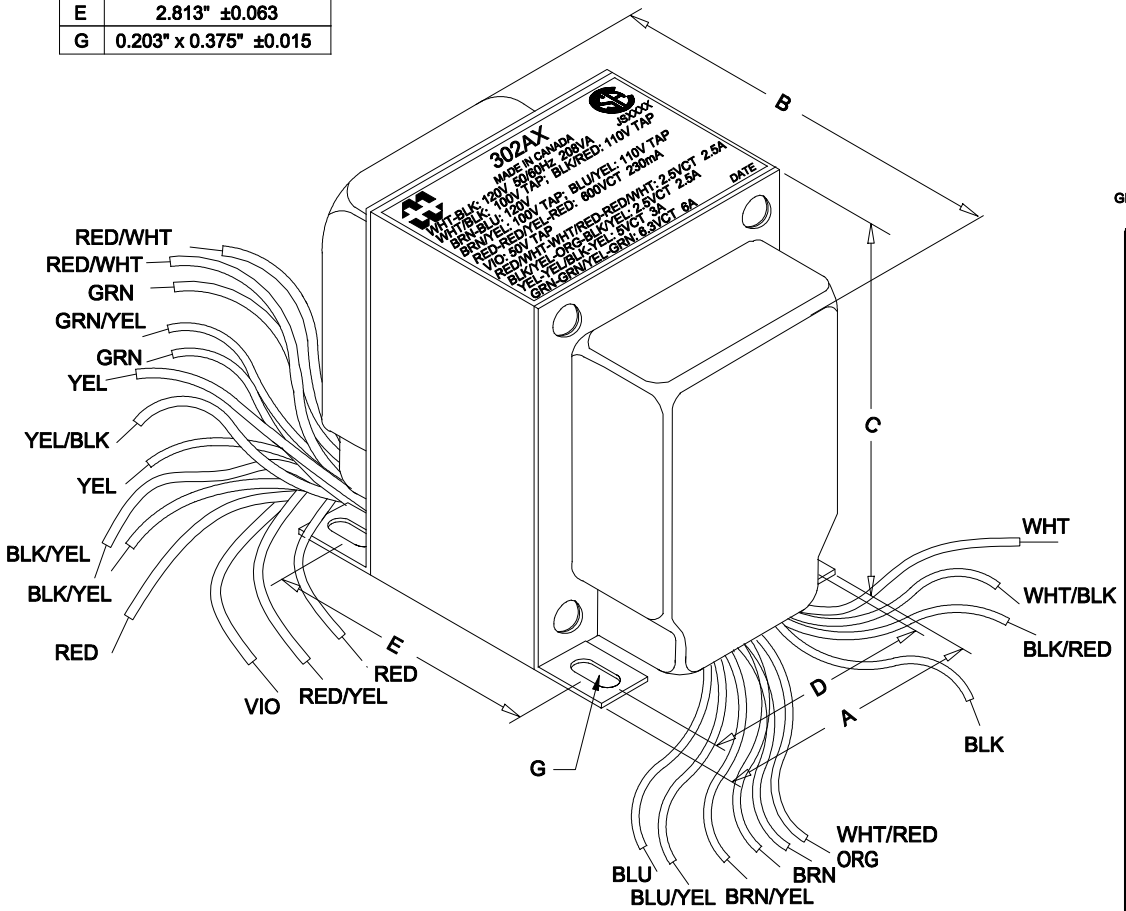

NOTE:ALL LEADS 8" OUT MIN., STRIPPED .5"

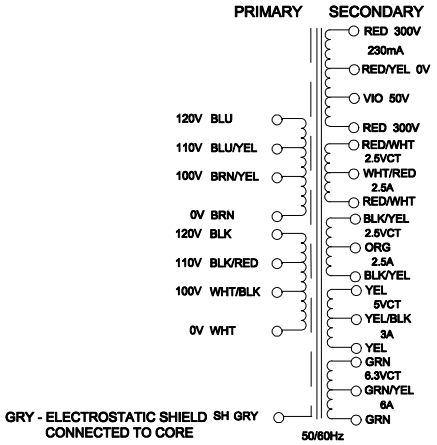

SECONDARY RATED VOLTAGES UNDER LOAD

ELECTRICAL DATA:

TESTS	CONDITIONS	ACCEPTANCE CRITERIA	
Iex	@ 120V, 60Hz, WHT - BLK	160mA	Max.
Sec. N.L.V	@ 120V, 60Hz, WHT - BLK		
	RED - RED =	648.0V	±2%
	RED - RED/YEL = RED/YEL - RED =	324.0V	±2%
	RED/YEL - VIO =	52.26V	±2%
	RED/WHT - WHT/RED =	1.355V	±2%
	WHT/RED - RED/WHT =	1.355V	±2%
	RED/WHT - RED/WHT =	2.710V	±2%
	BLK/YEL - ORG = ORG - BLK/YEL =	1.355V	±2%
	BLK/YEL - BLK/YEL =	2.710V	±2%
	YEL - YEL/BLK = YEL/BLK - YEL =	2.710V	±2%
	YEL - YEL =	5.419V	±2%
	GRN - GRN/YEL = GRN/YEL - GRN =	3.484V	±2%
	GRN - GRN =	6.968V	±2%
DCR	@ 20°C, WHT - BLK =	2.927 Ω	±20%
	@ 20°C, BRN - BLU =	3.276 Ω	±20%
	@ 20°C, RED - RED =	80.64 Ω	±20%
	@ 20°C, RED/WHT - RED/WHT =	0.036 Ω	±20%
	@ 20°C, BLK/YEL - BLK/YEL =	0.037 Ω	±20%
	@ 20°C, YEL - YEL =	0.061 Ω	±20%
	@ 20°C, GRN - GRN =	0.062 Ω	±20%
HIPOT	PRMARY - SECONDARY	2500V, 60Hz, 1 SEC	

REV.#	REVISION	DATE
0	RELEASED.	01/30/12

HAMMOND MANUFACTURING™
ELECTRONIC DIVISION
52 RANKIN PLACE,
WATERLOO, ONTARIO, N2J 3Z5
PH # (519) 886-6181
FAX # (519) 886-9540

DWG. BY: C. ILIE
DATE: 01/30/12
CHK'D BY:
APP'D. BY:
DIMENSIONS: IN(X) MM( )
TITLE: POWER TRANSFORMER
DWG. NO. 302AX